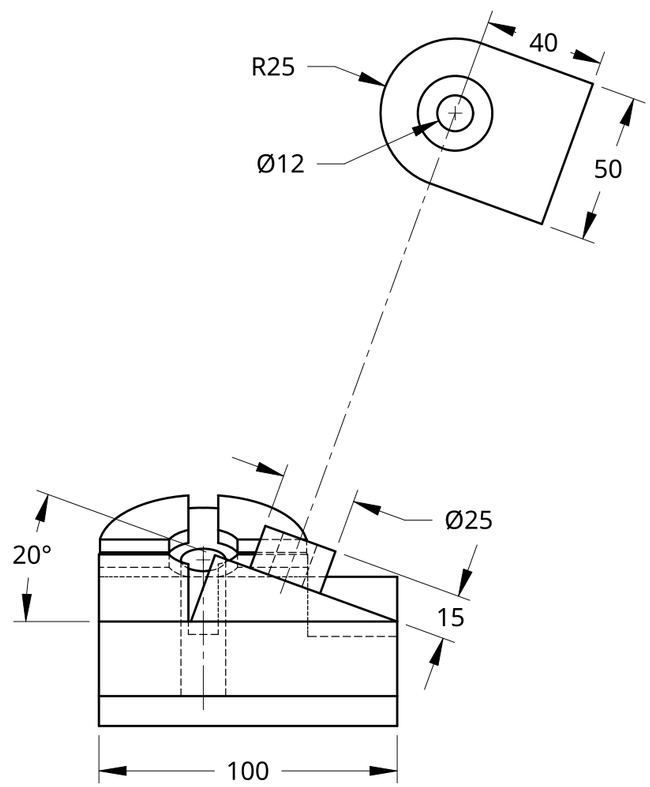

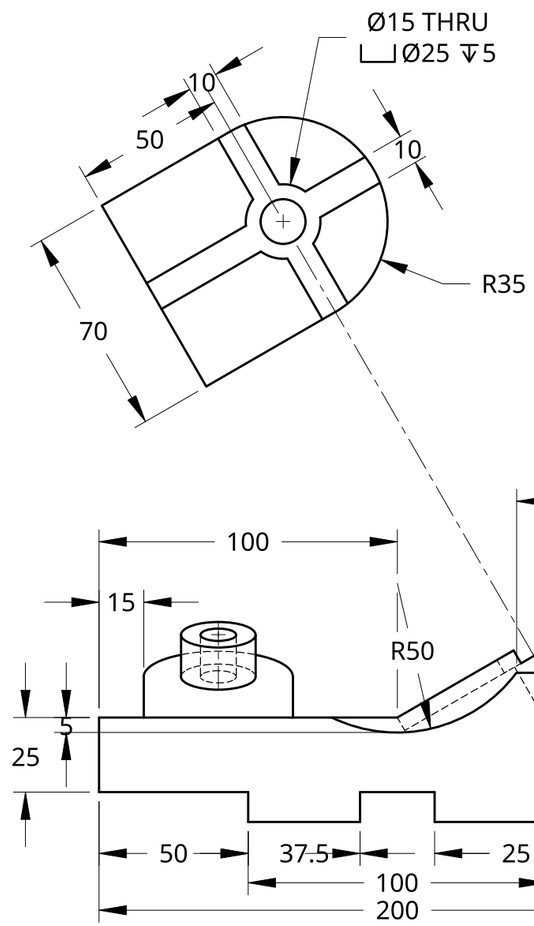

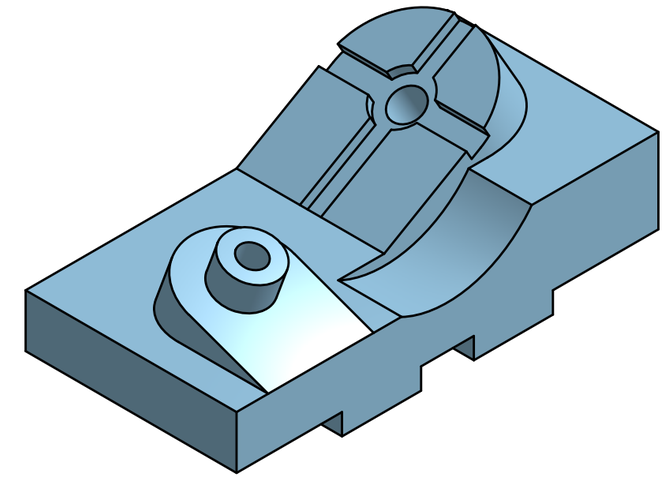

		NAME	DATE
UNLESS OTHERWISE SPECIFIED, DIMENSIONS ARE IN INCHES .XX = ±.0- .XXX = ±.00- .XXXX = ±.000- ANGULAR = ± ° FRACTIONAL = ± SURFACE FINISH √	DRAWN	BRODY DAI	10/30/2025
	CHECKED		
	APPROVED		
DO NOT SCALE DRAWING			
BREAK ALL SHARP EDGES AND REMOVE BURRS			
THIRD ANGLE PROJECTION	MATERIAL	FINISH	

SWWC Career & Technical Education
CHELSEA-DEXTER-LINCOLN-MANCHESTER-MILAN-SALINE

TITLE

SERGEANT CRISPY

SIZE	DWG NO.	REV.
B		

SCALE	WEIGHT	SHEET
1:2		1 of 1