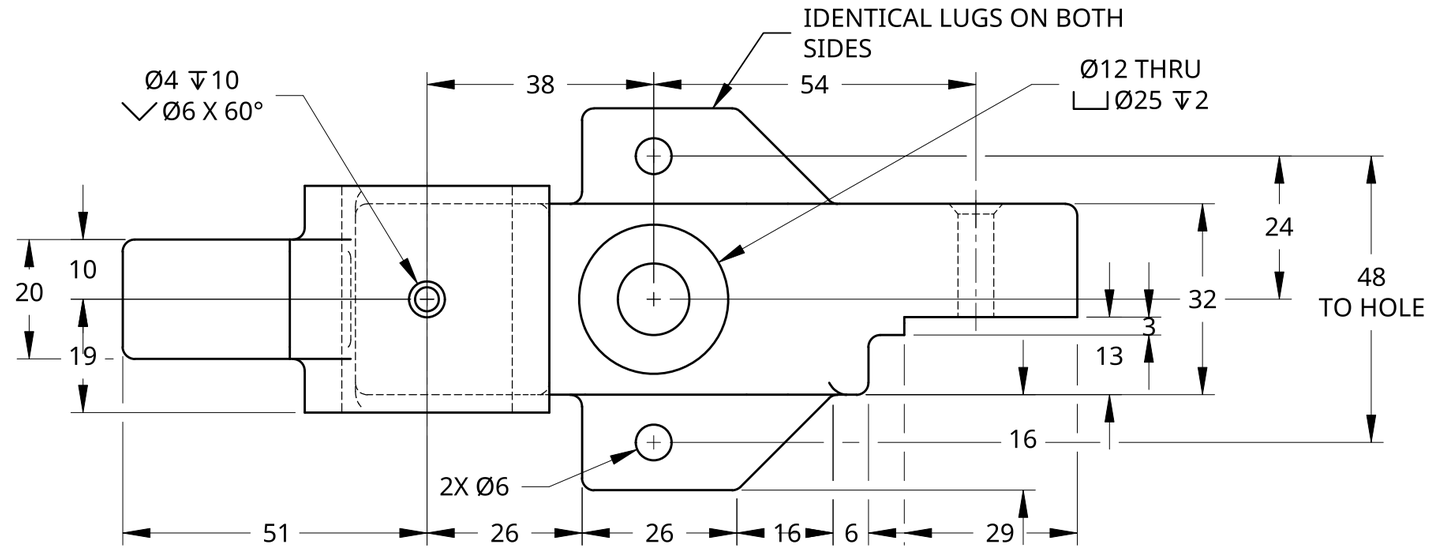

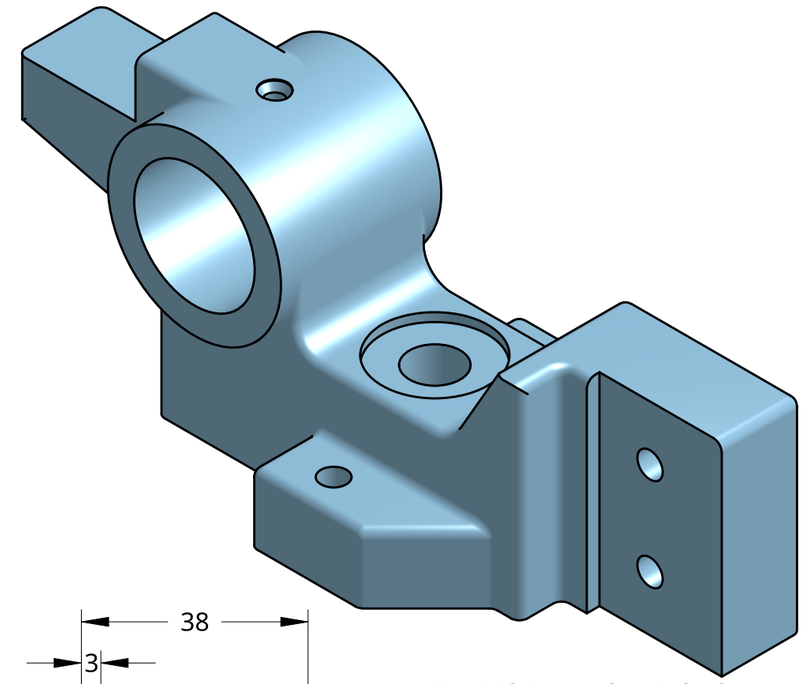

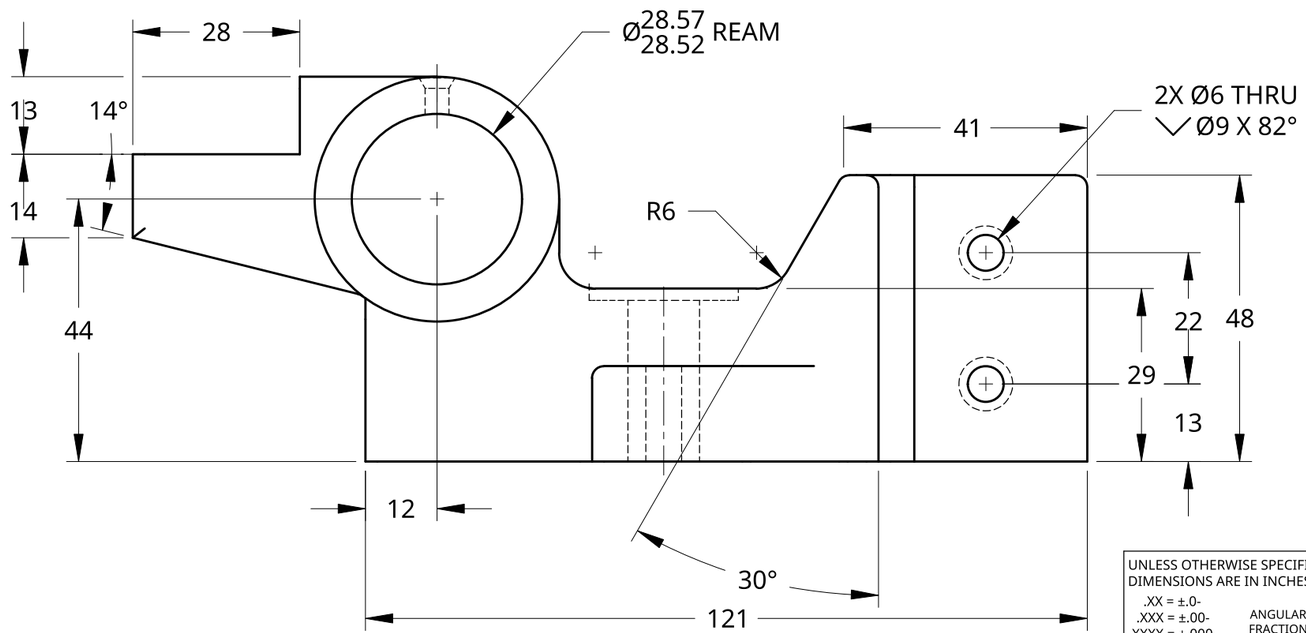

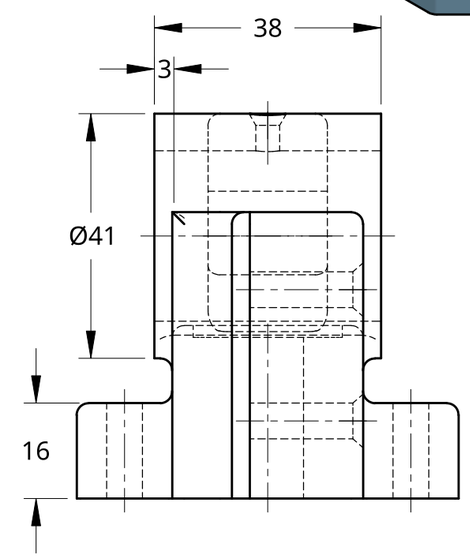

FILLETS AND ROUNDS R2

UNLESS OTHERWISE SPECIFIED, DIMENSIONS ARE IN INCHES .XX = ±.0- .XXX = ±.00- .XXXX = ±.000- ANGULAR = ± ° FRACTIONAL = ± SURFACE FINISH		NAME	DATE
	DRAWN	BRODY DAI	12/25/2024
	CHECKED		
	APPROVED		
DO NOT SCALE DRAWING			
BREAK ALL SHARP EDGES AND REMOVE BURRS			
THIRD ANGLE PROJECTION	MATERIAL	FINISH	

TITLE

GRIPPER ROD CENTER

SIZE	DWG NO.	REV.
B		

SCALE	WEIGHT	SHEET
1:1		1 of 1