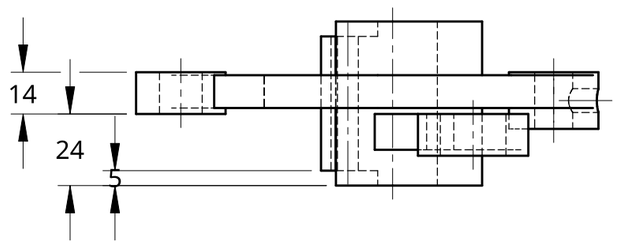

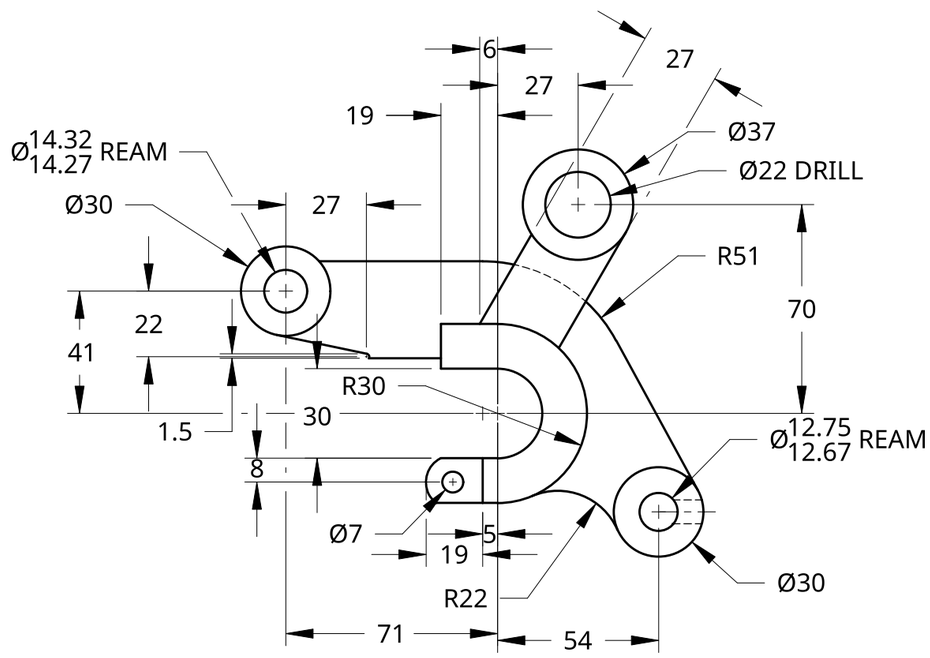

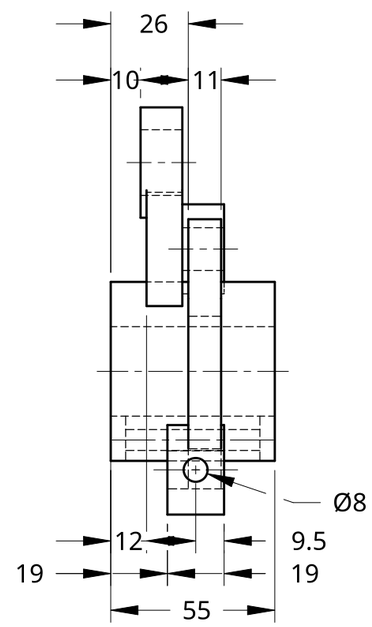

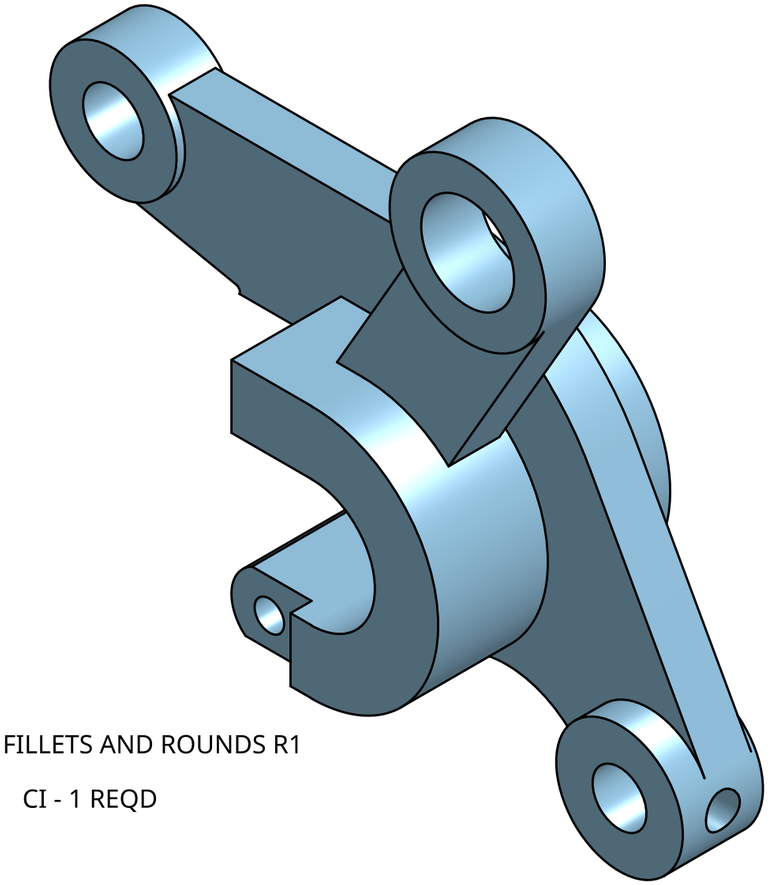

FILLETS AND ROUNDS R1

CI - 1 REQD

SCALE 1:1

UNLESS OTHERWISE SPECIFIED, DIMENSIONS ARE IN INCHES .XX = ±.0- .XXX = ±.00- .XXXX = ±.000- ANGULAR = ± ° FRACTIONAL = ± SURFACE FINISH		NAME	DATE
	DRAWN	BRODY DAI	01/07/2025
	CHECKED		
	APPROVED		
DO NOT SCALE DRAWING			
BREAK ALL SHARP EDGES AND REMOVE BURRS			
THIRD ANGLE PROJECTION	MATERIAL	FINISH	

TITLE

SOCKET FORM ROLLER LH

SIZE	DWG NO.	REV.
B		

SCALE	WEIGHT	SHEET
1:2		1 of 1